WALL SCONCES

Odile

SPECIFICATIONS

PRODUCT TYPE	Wall Sconces
WIDTH	5.1 in / 13 cm
HEIGHT	6.3 in / 16 cm
EXTENSION FROM WALL	5.1 in / 13 cm from the wall
MATERIALS & FINISH	Glass shade, metal body
LIGHT SOURCE	LED
INSTALLATION	Wall mount

Dimensions are approximate (±0.4 in / 1 cm). Natural and hand-finished materials vary slightly from piece to piece.

OPTIONS

LAMPSHADE COLOR
transparent, Cognac

PROJECT	FIXTURE TYPE / TAG	LOCATION	QTY · APPROVED

Dimensions

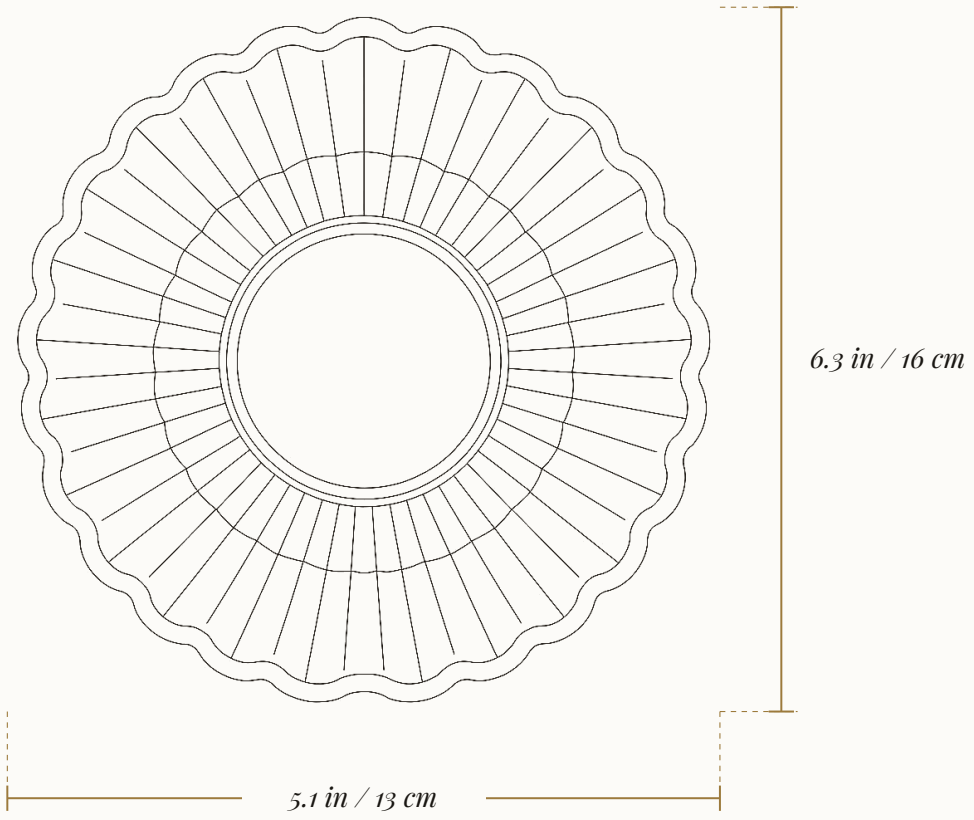

FRONT ELEVATION · NOT TO SCALE

AVAILABLE SIZES

SIZE	WIDTH	HEIGHT	EXTENSION FROM WALL
Standard	5.1 in / 13 cm	6.3 in / 16 cm	5.1 in / 13 cm from the wall

Overall dimensions of the fixture. Allow clearance around the fixture as described on page 4.

Tiixo	
FIXTURE Odile · Wall Sconces	
DRAWING NO. TX-WS-55072-D1	VIEW Front elevation
SCALE Not to scale	UNITS in / cm
ISSUED 7 Oct 2026	REVISION A

Ordering information

Catalogue numbers are Tiixo reference numbers. Every configuration of Odile currently offered, with its catalogue number. Quote the catalogue number when ordering or contacting us.

CONFIGURATIONS

LAMPSHADE COLOR	CATALOGUE NO.
transparent	TX–WS–55072–01
Cognac	TX–WS–55072–02

CARE & MAINTENANCE

Switch off and let the fixture cool. Dust with a soft, dry cloth; no solvents or abrasive cleaners.

WARRANTY & RETURNS

Covered by the Tiixo limited warranty. Returns accepted within 30 days of delivery, unused and in original packaging, with no restocking fee. If it arrives damaged, send a photo within 7 days and we ship a replacement first.

For your electrician

ELECTRICAL

LIGHT SOURCE	LED
INSTALLATION	Wall mount

WIRING (GENERAL GUIDANCE)

FIXTURE WIRE	CONNECT TO
● Black (or ribbed)	Line / hot
○ White (or smooth)	Neutral
● Green / bare copper	Ground

1. Turn power off at the breaker and confirm it is off with a non-contact tester.
2. Fix the mounting bracket to a recessed wall junction box rated for the fixture's weight, using the hardware supplied.
3. Make the connections above with approved connectors and fold the wires neatly into the box.
4. Fit the backplate, install bulbs within the rated wattage, restore power and test.

BEFORE YOU INSTALL

- ☐ A recessed wall junction box at the planned mounting height
- ☐ Supply voltage confirmed for your region
- ☐ Wall surface flat and able to carry the fixture's weight
- ☐ A dimmer, if used, rated for the light source
- ☐ Power off at the breaker before any work begins

PLACEMENT GUIDELINES

MOUNTING HEIGHT

Centre of the fixture about 60–66 in (152–168 cm) from the finished floor, near eye level.

BESIDE A MIRROR OR BED

A pair set roughly 36–40 in (91–102 cm) apart; beside a bed, about 24–30 in (61–76 cm) above the mattress.

HALLWAYS

Space sconces every 8–10 ft (2.4–3 m) for an even wash of light.

> **Safety.** Turn off power at the breaker before installing. Installation must follow local electrical codes (the NEC in the US). We recommend a licensed electrician for every hardwired fixture. Never exceed the rated wattage.

Questions before or during install?

Call or text (813) 790-7240 · support@tiixo.com

9am – 5pm Eastern, seven days. We reply within 12 hours.

Returns. 30 days from delivery, no restocking fee.