CHANDELIERS

Gio

SPECIFICATIONS

PRODUCT TYPE	Chandeliers
WIDTH	Ø 23.6 – 27.6 in / 60 – 70 cm (3 · 5 heads)
HEIGHT	11.4 in / 29 cm
INSTALLATION	Ceiling-hung, adjustable height

Dimensions are approximate (±0.4 in / 1 cm). Natural and hand-finished materials vary slightly from piece to piece.

OPTIONS

SIZE
3 heads D 60cm x H 29cm / ⌀ 23.6″ x H 11.4″, 5 heads D 70cm x H 29cm / ⌀ 27.6″ x H 11.4″

FINISHES
Wood color & Beige, Wood color & White

PROJECT	FIXTURE TYPE / TAG	LOCATION	QTY · APPROVED

Dimensions

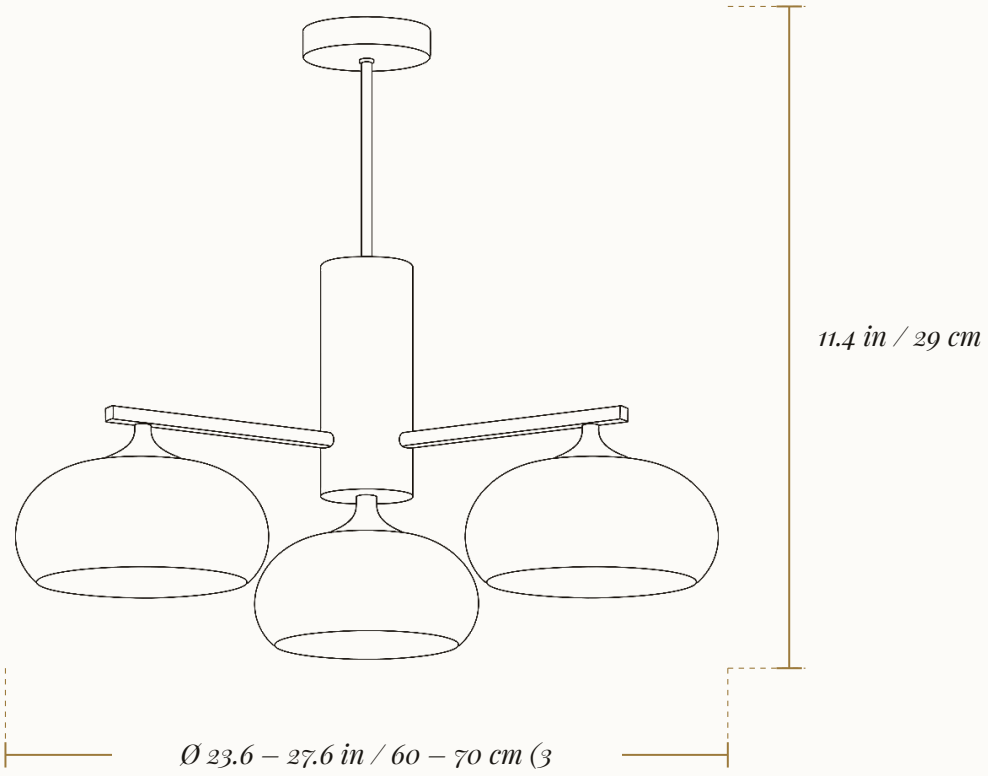

FRONT ELEVATION · NOT TO SCALE · FIRST LISTED SIZE SHOWN

AVAILABLE SIZES

SIZE	WIDTH	HEIGHT
3 heads D 60cm x H 29cm / ⌀ 23.6″ x H 11.4″	Ø 23.6 – 27.6 in / 60 – 70 cm (3	11.4 in / 29 cm
5 heads D 70cm x H 29cm / ⌀ 27.6″ x H 11.4″	5 heads)	11.4 in / 29 cm

Overall dimensions of the fixture. Allow clearance around the fixture as described on page 4.

Tiixo	
FIXTURE Gio · Chandeliers	
DRAWING NO. TX-CH-64288-D1	VIEW Front elevation
SCALE Not to scale	UNITS in / cm
ISSUED 7 Oct 2026	REVISION A

Ordering information

Catalogue numbers are Tiixo reference numbers. Every configuration of Gio currently offered, with its catalogue number. Quote the catalogue number when ordering or contacting us.

CONFIGURATIONS

SIZE	FINISHES	CATALOGUE NO.
3 heads D 60cm x H 29cm / ⌀ 23.6″ x H 11.4″	Wood color & Beige	TX–CH–64288–01
3 heads D 60cm x H 29cm / ⌀ 23.6″ x H 11.4″	Wood color & White	TX–CH–64288–02
5 heads D 70cm x H 29cm / ⌀ 27.6″ x H 11.4″	Wood color & Beige	TX–CH–64288–03
5 heads D 70cm x H 29cm / ⌀ 27.6″ x H 11.4″	Wood color & White	TX–CH–64288–04

CARE & MAINTENANCE

Switch off and let the fixture cool. Dust with a soft, dry cloth; no solvents or abrasive cleaners.

WARRANTY & RETURNS

Covered by the Tiixo limited warranty. Returns accepted within 30 days of delivery, unused and in original packaging, with no restocking fee. If it arrives damaged, send a photo within 7 days and we ship a replacement first.

For your electrician

ELECTRICAL

INSTALLATION	Ceiling-hung, adjustable height

WIRING (GENERAL GUIDANCE)

FIXTURE WIRE	CONNECT TO
● Black (or ribbed)	Line / hot
○ White (or smooth)	Neutral
● Green / bare copper	Ground

1. Turn power off at the breaker and confirm it is off with a non-contact tester.
2. Fix the mounting bracket to a ceiling junction box rated for the fixture's weight, using the hardware supplied.
3. Make the connections above with approved connectors and fold the wires neatly into the box.
4. Fit the canopy, install bulbs within the rated wattage, restore power and test.

BEFORE YOU INSTALL

- [ ] A ceiling junction box rated for the fixture's weight
- [ ] Supply voltage confirmed for your region
- [ ] Ceiling height measured, so the fixture clears walkways
- [ ] A dimmer, if used, rated for the light source
- [ ] A second person or a stable ladder for lifting the fixture
- [ ] Power off at the breaker before any work begins

PLACEMENT GUIDELINES

OVER A TABLE

Hang the bottom of the fixture 30–36 in (76–91 cm) above the tabletop; choose a width about one-half to two-thirds of the table.

OVER AN ISLAND

Space multiple pendants 24–30 in (61–76 cm) apart, 30–36 in above the counter.

OPEN AREAS

In halls and living spaces keep at least 84 in (7 ft / 213 cm) clear underneath; add about 3 in of drop per foot of ceiling above 8 ft.

> **Safety.** Turn off power at the breaker before installing. Installation must follow local electrical codes (the NEC in the US). We recommend a licensed electrician for every hardwired fixture. Never exceed the rated wattage.

Questions before or during install?
Call or text (813) 790-7240 · support@tiixo.com
9am – 5pm Eastern, seven days. We reply within 12 hours.
Returns. 30 days from delivery, no restocking fee.